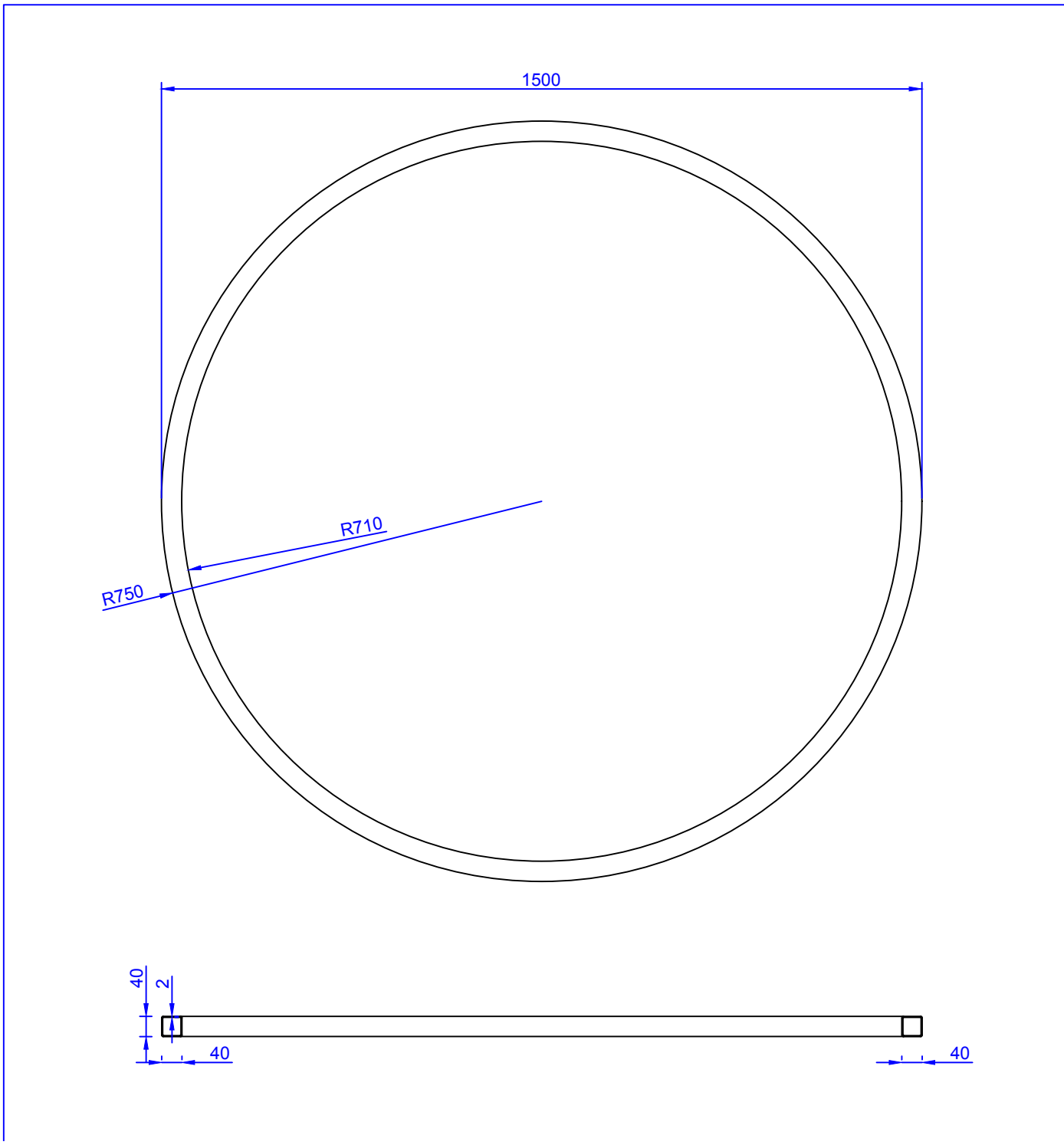
1500
R710
R750
40
2
40
40